BT3100 Compact 4-Wheel Dolly

By Rick Slaugh (rslaugh)
rslaugh@comcast.net

I live in a townhouse with a single car garage (which is an oxymoron because the garage will never house a car) that I share with my wife's vintage clothing business. Needless to say sawdust and vintage clothing doesn't mix very well so my "shop" needs to be portable and move to the driveway when I actually want to use it. I bought the accessory kit for my BT primarily for the 4" casters. I soon learned that the casters are a poor solution for me because of the location underneath a storage cabinet where the saw gets stored.

The Ryobi casters require you to lift one end of the saw so that it rotates up onto the casters. This dolly has a simple foot operated lever which raises and lowers the saw on 4 casters allowing for much easier movement off the saw. It's actually a very simple mechanism. There are two plates with the wheels attached to the bottom and hinged to the saw's existing table legs. The lever is attached to the back plate and when pushed down raises the saw up and engages the wheels. It also pushes the front plate down which lifts the front of the saw and engages the front wheels also. The lever is then slid to the right underneath a catch and now you can roll the saw anywhere.

Soon after posting my dolly Martin McCrory posted a variation that simplifies the design and Dave Robertson posted pics of his version. Pictures of both are included here so you can get an idea of what's possible using whatever you have laying around the shop.

In the Rolling position. Hard to tell but the table legs are about 3/4 in off the ground. The bar that spans both plates pivots on the screw on the left plate and is slid under the bracket on the right plate holding it in position.

With the bar released the plates pivot up and the table legs are in firm contact with the ground.

The plates pivot around 1/2 in bolts which are 10 in long. They are held in place on the plates by two pieces of wood with 1/2" wide slot 1/4" deep sandwiched together to form a 1/2" x 1/2" square hole for the bolt to be run through as shown below.

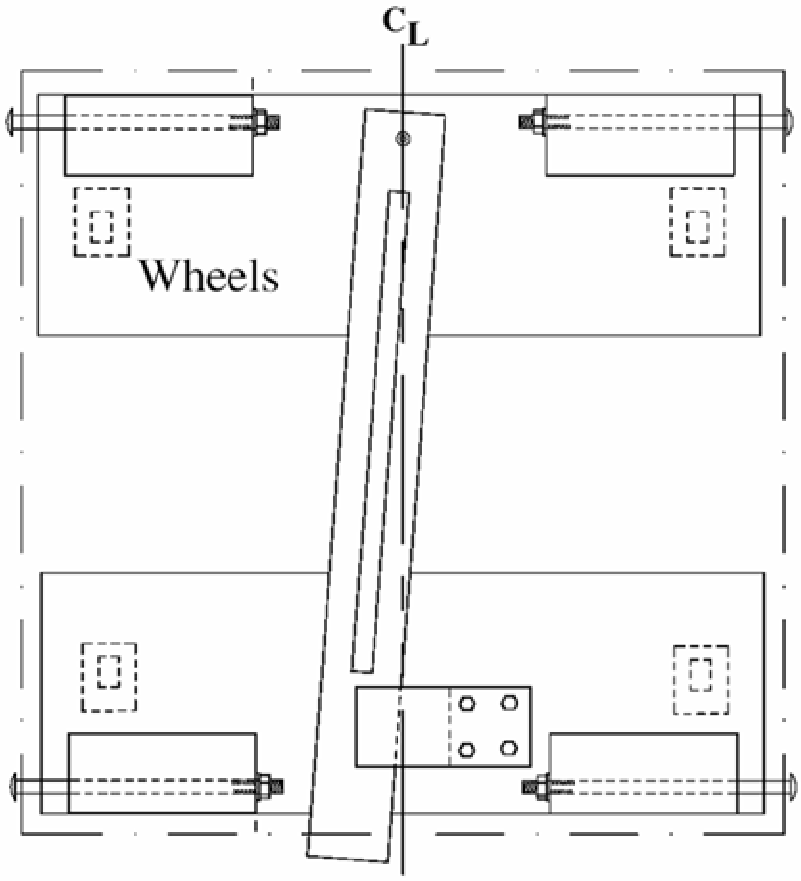

saw base outline

Front

Axel Bearings (8) use 2 for each axel sandwiched together
and held to plate with 1/4" bolts 4 places

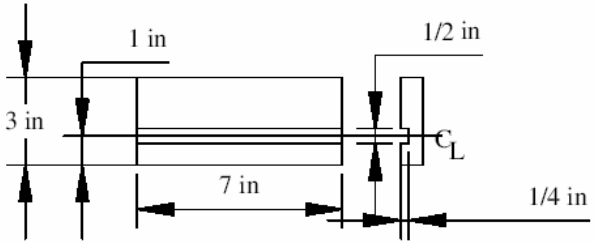

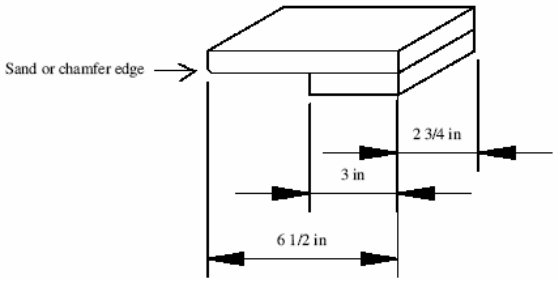

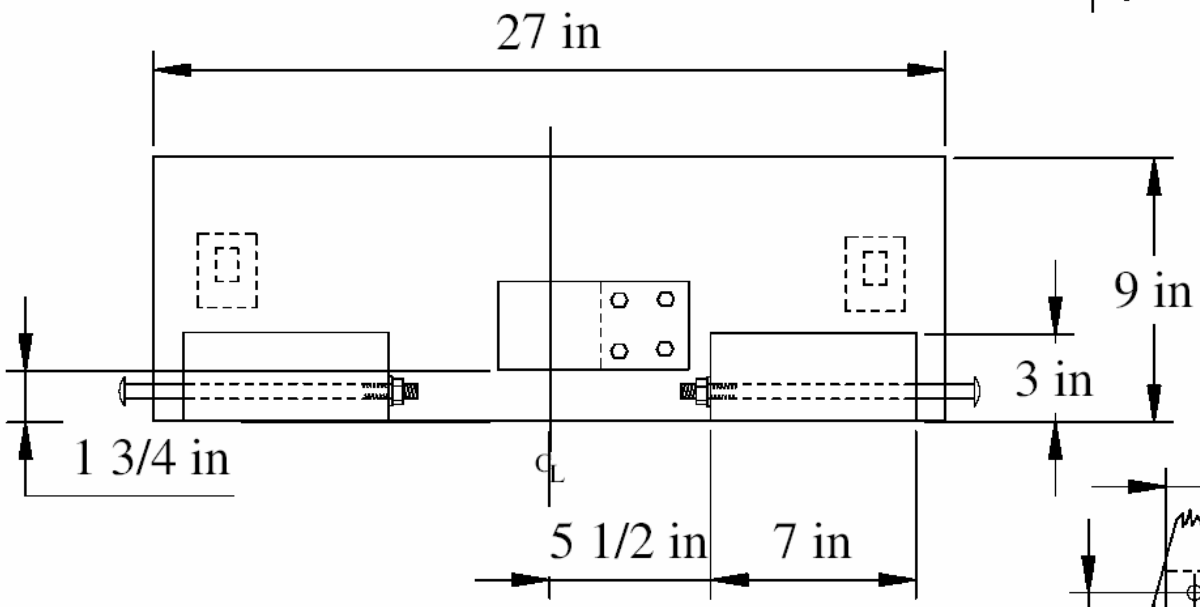

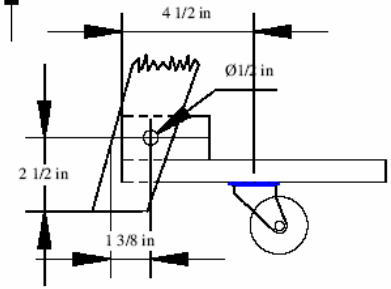

Note: all parts made out of 3/4" MDF or Plywood

Wheels need to be located so that table legs
firmly contact the ground with lever raised

Martin McCrory’s version (mccrorey)

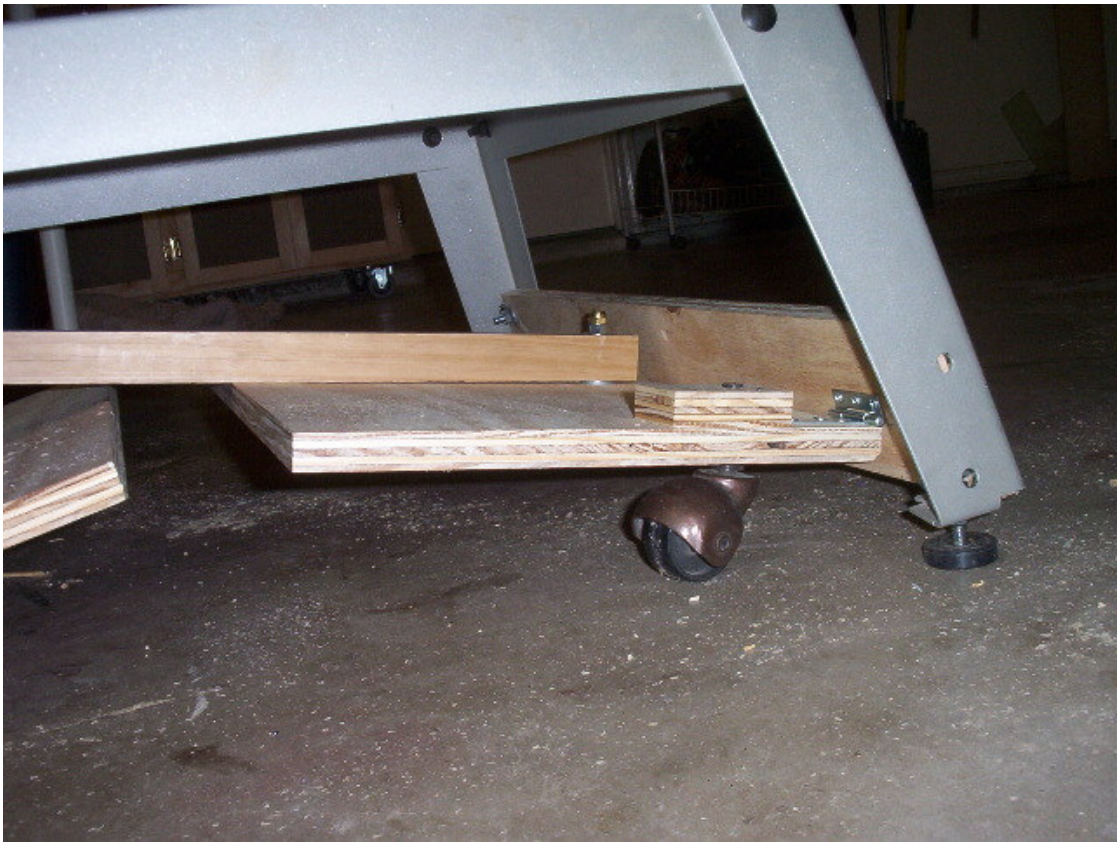

Dave Robertson's Version (dave40261)